TRADE
WINDOWS & DOORS

REHAU®
Unlimited Polymer Solutions

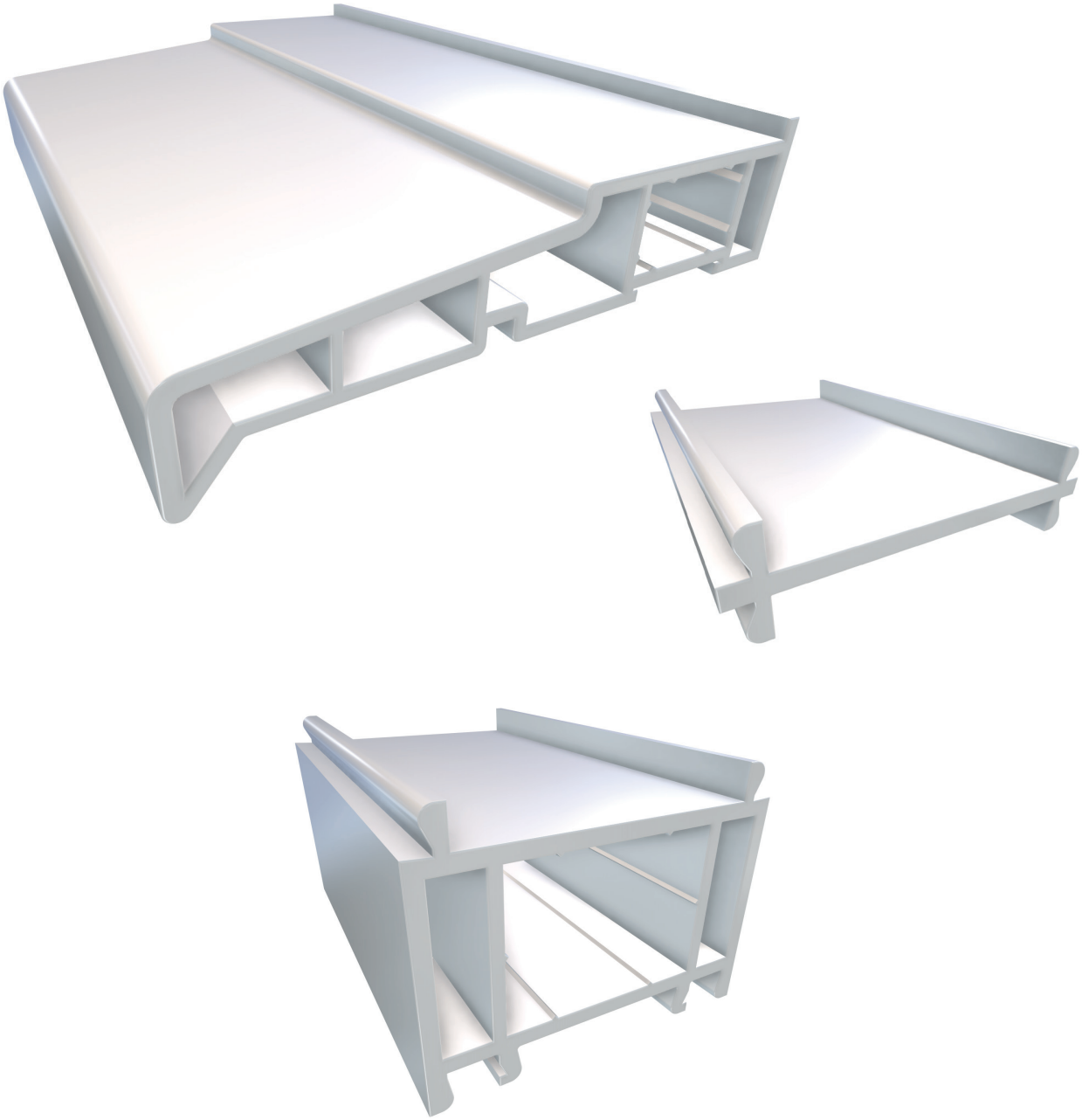

REHAU TOTAL70 ANCILLARIES

PROFILE PRINT

www.rehau.co.uk

Building Solutions
Automotive
Industry

REHAU TOTAL70 ANCILLARIES

PROFILE PRINT

The following profile print shows PVC-U sills, ancillary profiles and mouldings dedicated to the REHAU TOTAL70 Window and Door system.

Each item is identified by at least one Article No., many have two Article Nos. The first Article No. identifies the basic item, the second identifies the laminated item.

A 3 digit Variant No. after the Article No. then denotes standard packaging and colour options:

Key to variant system.

701	Individual packs	White profile/beads with Black co-ex gasket
705	Individual packs	White profile/beads with White co-ex gasket
901	Stillage	White profile
751	Individual packs	Mahogany foil both faces on Brown base profile/beads with Black co-ex gasket
721	Individual packs	Mahogany foil to Face A on White base profile
761	Individual packs	Mahogany foil to Face B on White base profile
790	Individual packs	Golden Oak foil beads with Black co-ex gasket
351	Individual packs	Golden Oak foil on both faces on Acorn base
321	Individual packs	Golden Oak foil to Face A on a White base profile
361	Individual packs	Golden Oak foil to Face B on a White base profile
251	Individual packs	Rosewood foil both faces on Brown base profile/beads with Black co-ex gasket
221	Individual packs	Rosewood foil to Face A on White base profile
261	Individual packs	Rosewood foil to Face B on White base profile
Other Variants	Various items	Other variants do not necessarily follow a set pattern. See relevant section of this profile print for exact description.

Where profiles are symmetrical there is no need to distinguish between faces, therefore only variant 721, 221 or 321 is needed. Please refer to ordering guide for standard lengths, pack quantities and confirmation of Article Nos & Variant Nos together with standard/non standard status.

*** DENOTES AVAILABLE AS A SPECIAL ORDER - NOT A STANDARD STOCK ITEM - PLEASE REFER TO SALES OFFICES FOR MINIMUM QUANTITIES, LEAD TIMES AND PRICES.**

REHAU TOTAL70 ANCILLARIES

SILLS

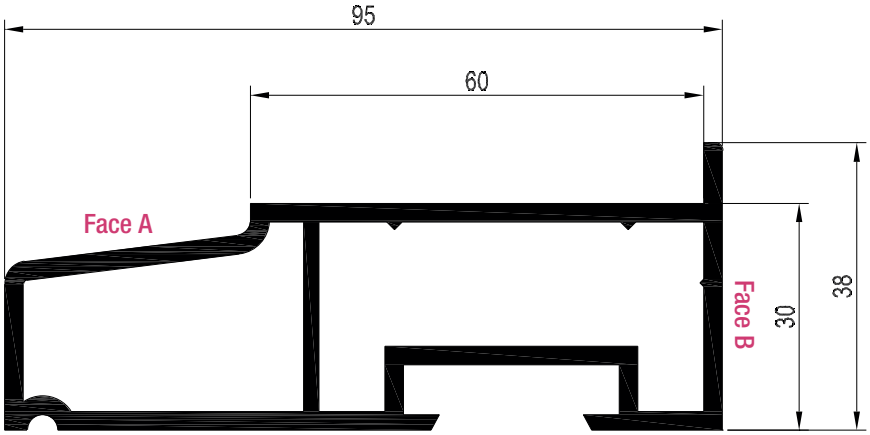

95mm Stub Sill
White Profile Art. No. 546360
Laminated Profile Art. No. 576870

	251355
	1.5mm
Ix	4.8
Iy	0.7

251355 - 50 x 15

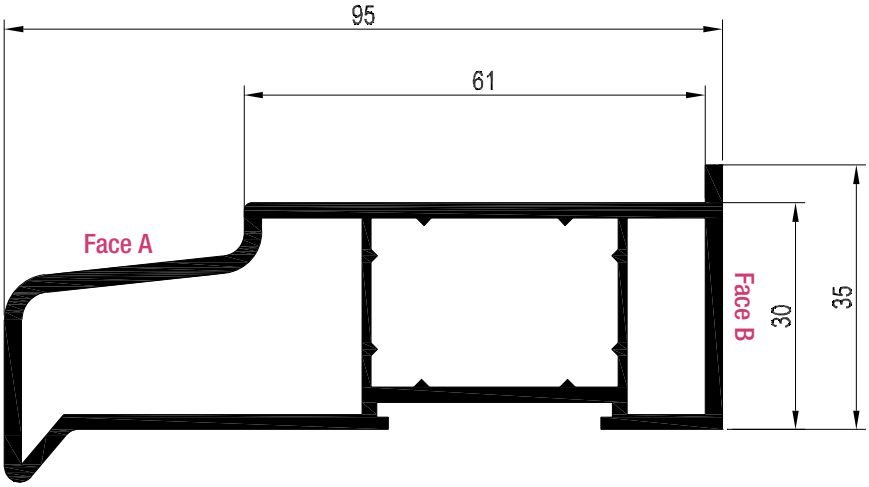

95mm Stub Sill
White Profile Art. No. 246320
Laminated Profile Art. No. 246350

	255924
	2mm
Ix	1.99
Iy	1.06

255924 - 30 x 20

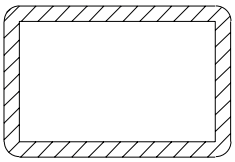

REHAU TOTAL70 ANCILLARIES

SILLS

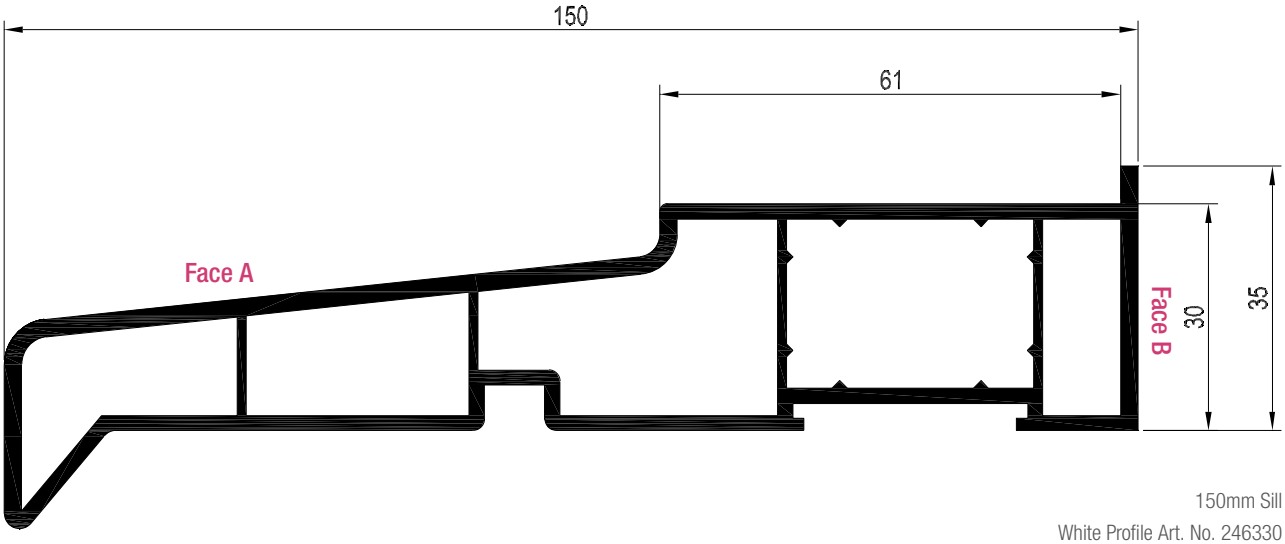

150mm Sill

White Profile Art. No. 246330

Laminated Profile Art. No. 246360

	255924
	2mm
Ix	1.99
Iy	1.06

255924 - 30 x 20

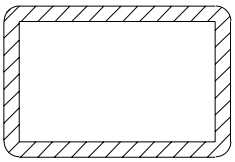

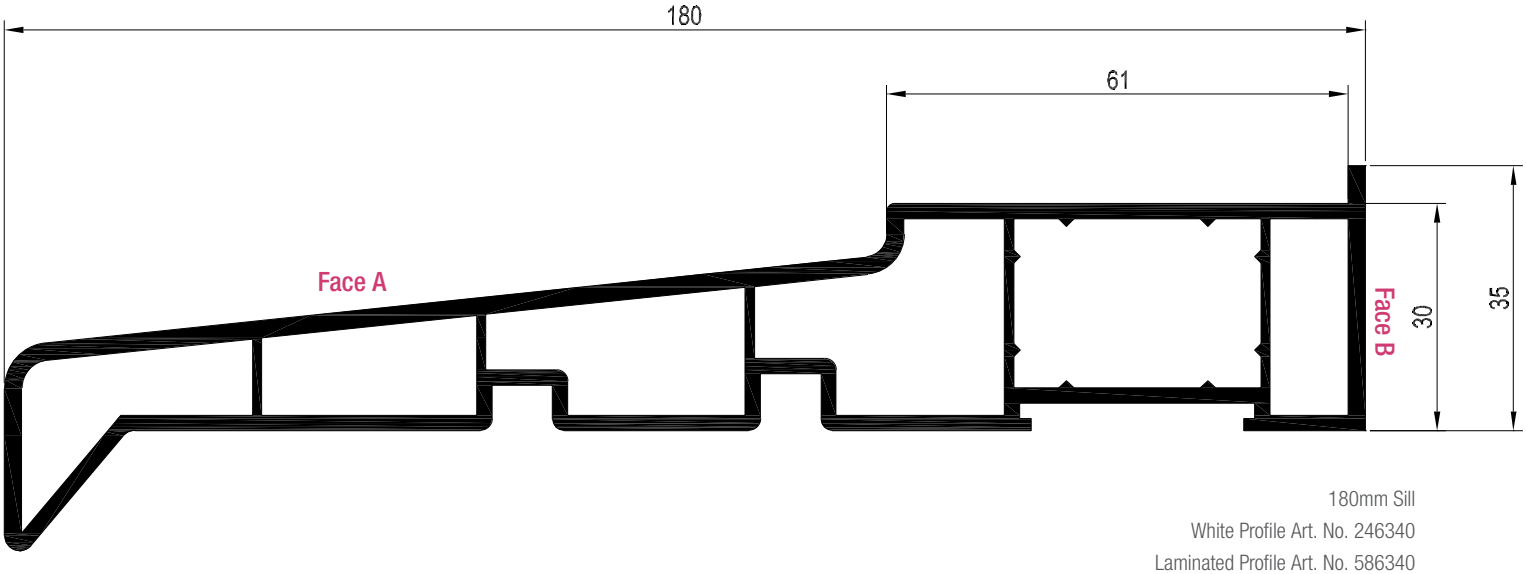

180mm Sill

White Profile Art. No. 246340

Laminated Profile Art. No. 586340

	255924
	2mm
Ix	1.99
Iy	1.06

255924 - 30 x 20

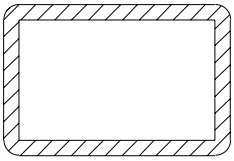

REHAU TOTAL70 ANCILLARIES

SILL END CAPS

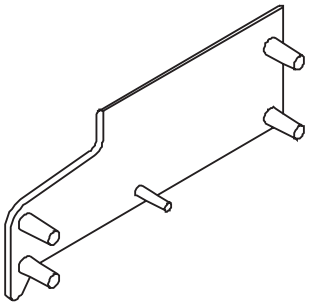

For 95mm Stub Sill
Art. No. 246390

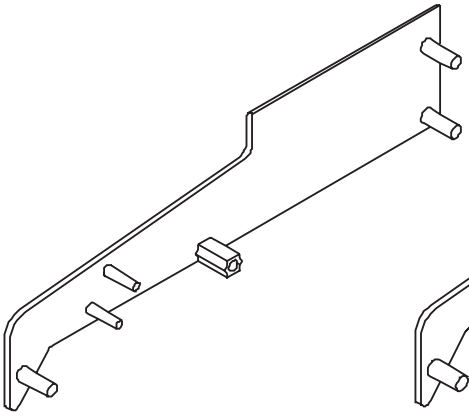

For 150mm Sill
Art. No. 246400

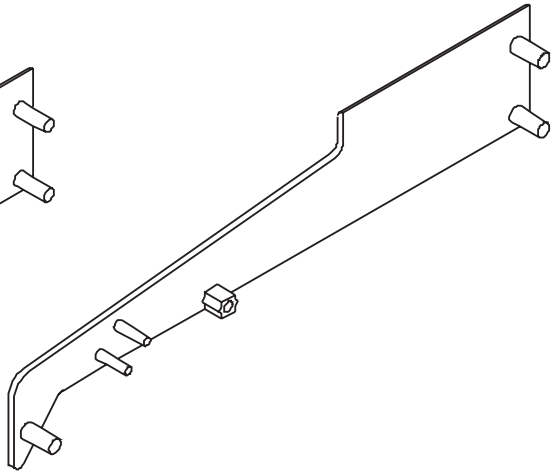

For 180mm Sill
Art. No. 246410

ANGLED COUPLERS FOR 150MM SILL

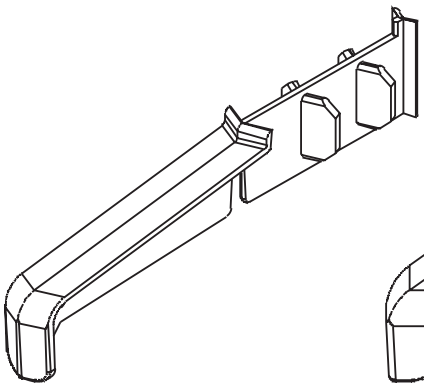

90° Coupler
For 150mm Sill
Art. No. 237571

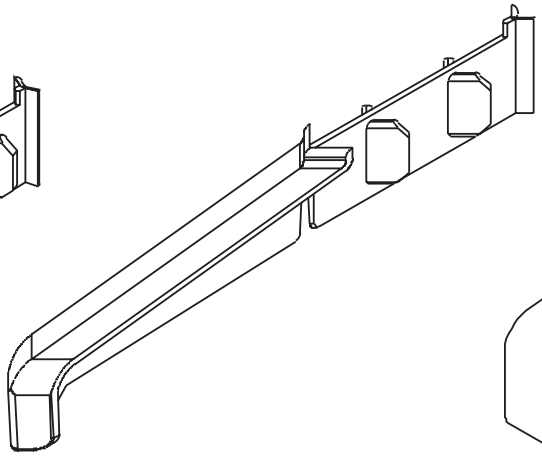

135° Coupler
For 150mm Sill
Art. No. 237551

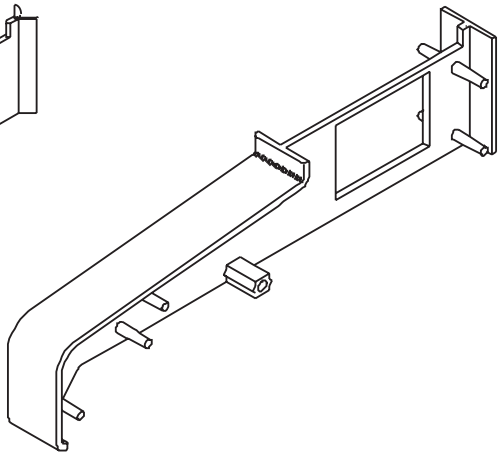

180° In-line Coupler
For 150mm Sill
Art. No. 237561

REHAU TOTAL70 ANCILLARIES

MECHANICAL JOINT BLOCKS

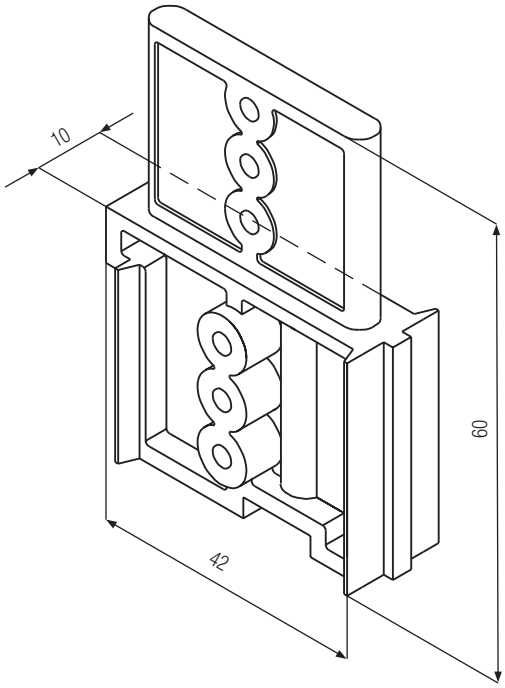

Mechanical Joint
For Transom / Mullion (546085 & 546095 / 546665 & 546675)
Art. No. 261209

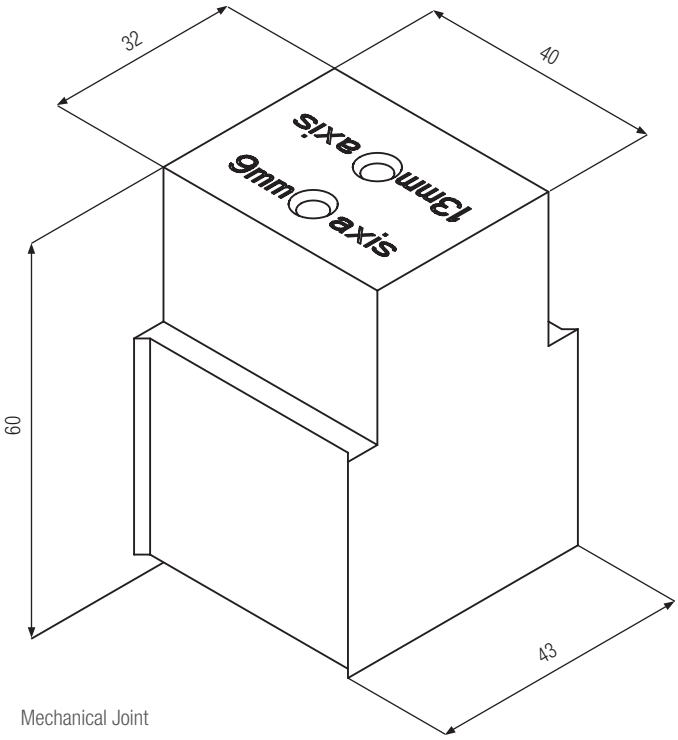

Mechanical Joint
For Door Sash (546635 & 546625 / 546715 & 546725)
Art. No. 246235

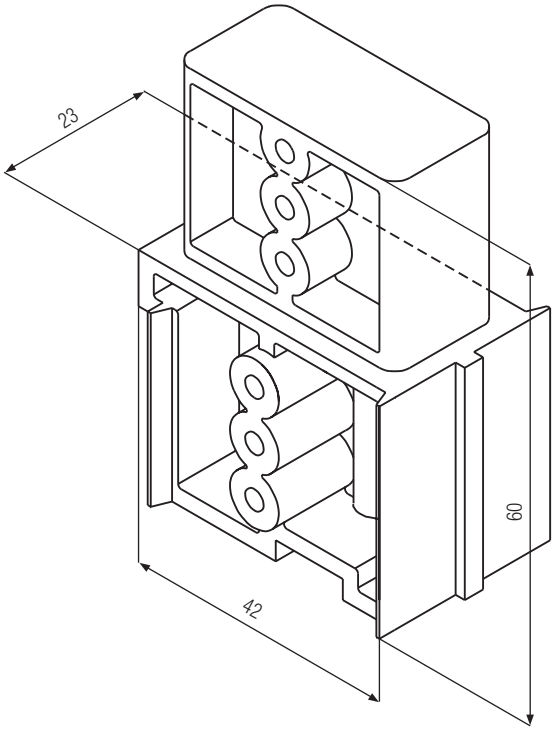

Mechanical Joint
For Transom / Mullion (546465 & 546475 / 546745 & 546755)
Art. No. 261199

REHAU TOTAL70 ANCILLARIES

FRENCH WINDOW AND DOOR COMPONENTS

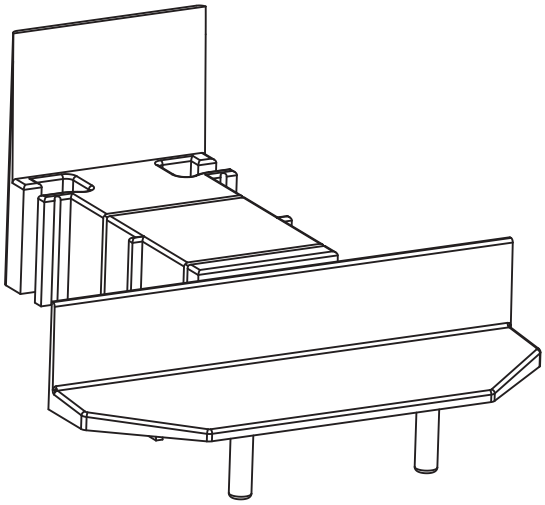

Dummy Mullion End Cap
For REHAU TOTAL70c Transom / Mullion (546085)
Art. No. 200574

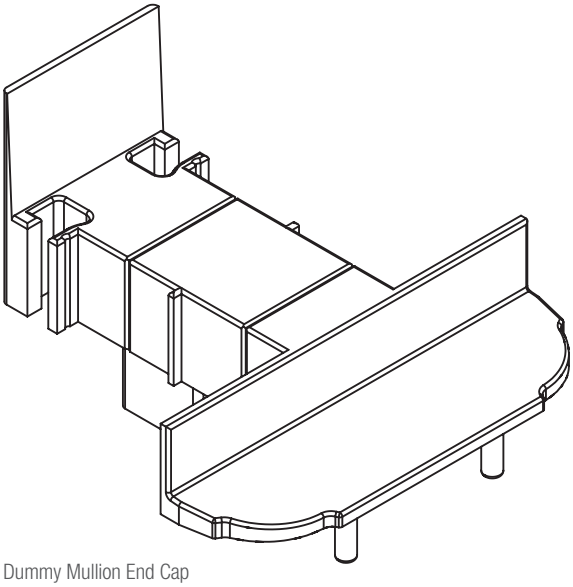

Dummy Mullion End Cap
For REHAU TOTAL70s Transom / Mullion (546665)
Art. No. 286928

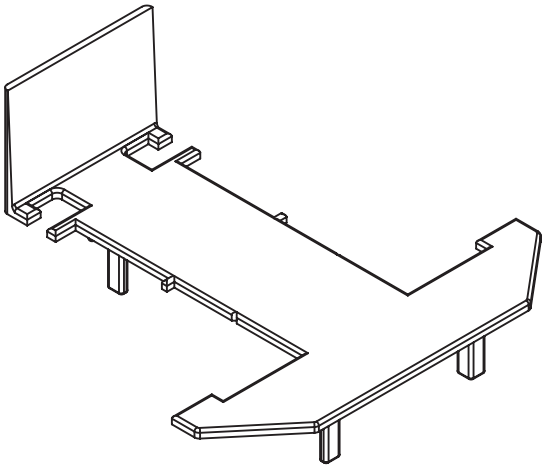

Dummy Mullion End Cap for Low Threshold
For REHAU TOTAL70c Transom / Mullion (546085)
Art. No. 200111

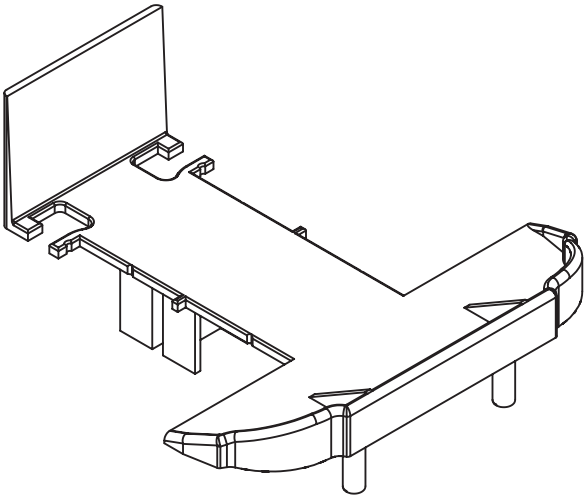

Dummy Mullion End Cap for Low Threshold
For REHAU TOTAL70s Transom / Mullion (546665)
Art. No. 286934

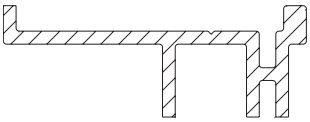

French Window Spacer
Art. No. 200131

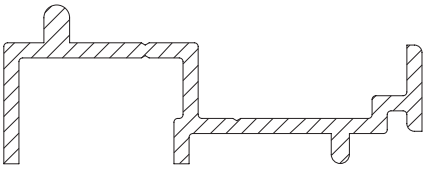

French Door Spacer
Art. No. 200367

REHAU TOTAL70 ANCILLARIES

SASH HORNS

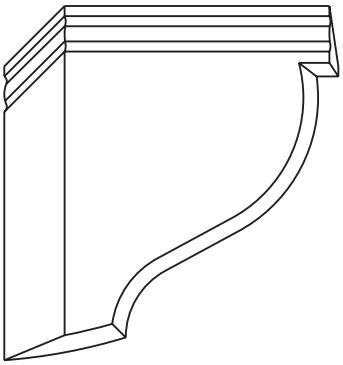

Casement Horns
Art. No. 245295

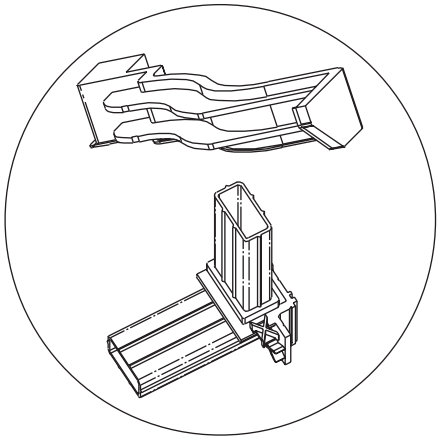

Run Through Sash Horns for REHAU TOTAL70c
Includes Left and Right End Caps and Mechanical Joints for Casement T Sash (546855)
Art. No. 317481

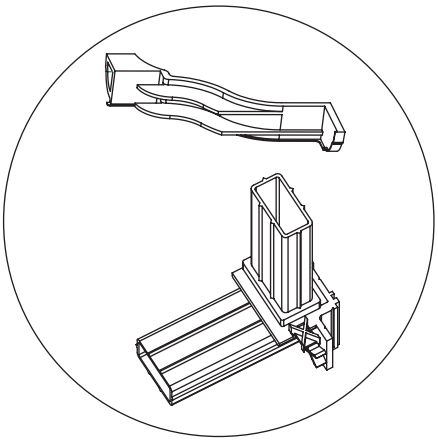

Run Through Sash Horns for REHAU TOTAL70s
Includes Left and Right End Caps and Mechanical Joints for Casement T Sash (546455)
Art. No. 317482

REHAU TOTAL70 ANCILLARIES

FRAME COUPLING / EXTENSION PROFILES

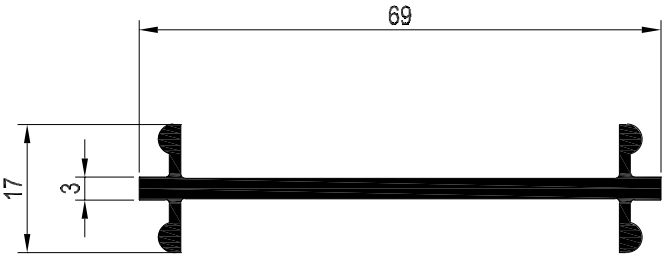

3mm Frame Joining Profile
White Profile Art. No. 546300
Laminated Profile Art. No. 576221

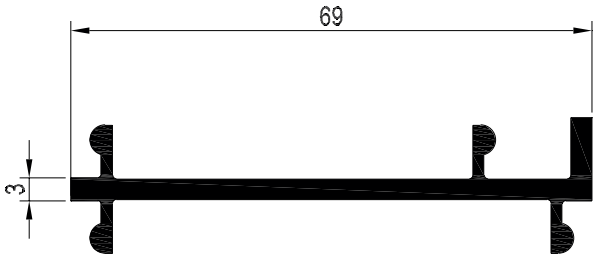

REHAU TOTAL70c to Patio Door Coupler
Art. No. 246488

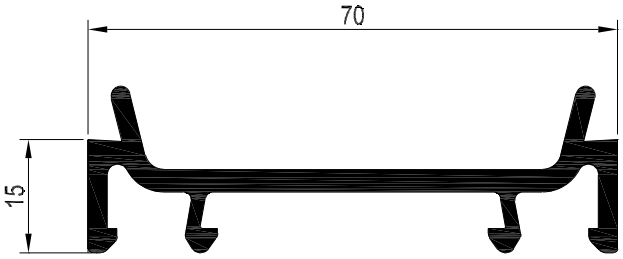

15mm Frame Joining Profile
White Profile Art. No. 546200
Laminated Profile Art. No. 576370

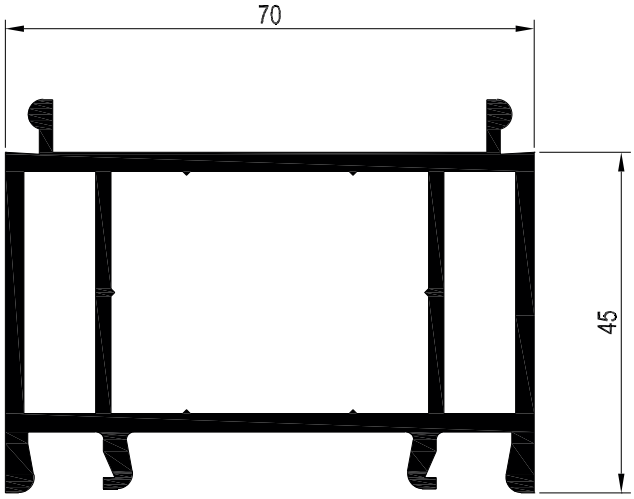

45mm Frame Extension
White Profile Art. No. 546280
Laminated Profile Art. No. 576790

	258358
⊢⊣	1.5mm
Ix	4.39
Iy	2.84

258358 - 40 x 30

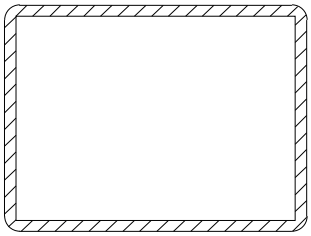

REHAU TOTAL70 ANCILLARIES

FRAME COUPLING / EXTENSION PROFILES

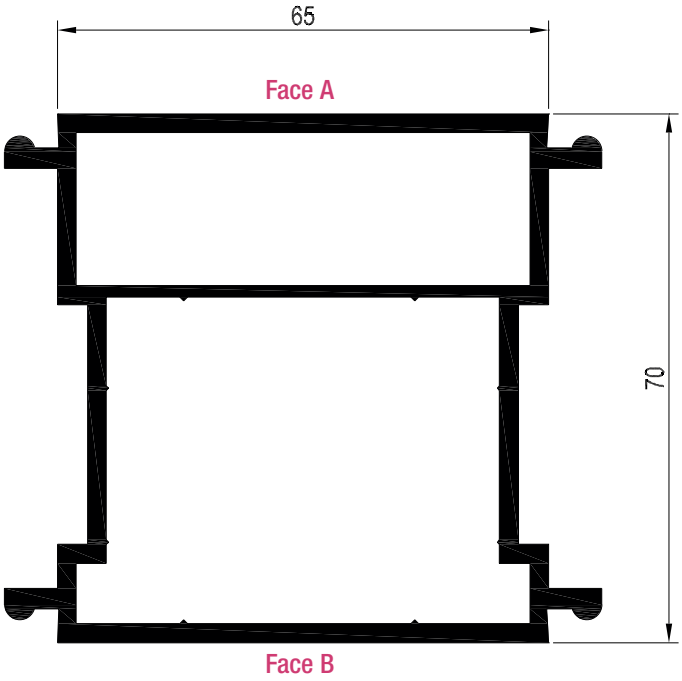

65mm Joining Profile / Conservatory Lintel Beam
White Profile Art. No. 546290
Laminated Profile Art. No. 576780

	253157
	4mm
Ix	14.02
Iy	20.3

253157 - 40 x 50

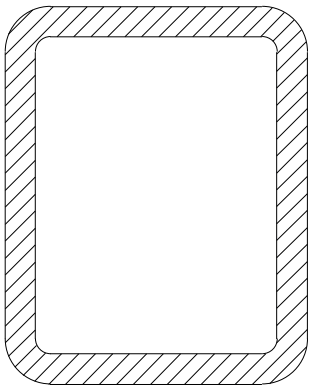

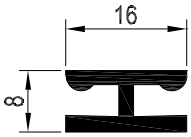

16mm Joining Profile
White Profile Art. No. 732460
Laminated Profile Art. No. 590010

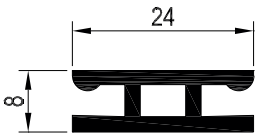

24mm Joining Profile
White Profile Art. No. 560700
Laminated Profile Art. No. 593920*

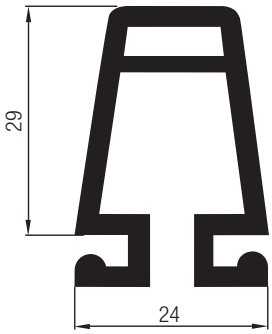

24.2mm Coupling Profile
White Profile Art. No. 200504
Laminated Profile Art. No. 200506

Face B

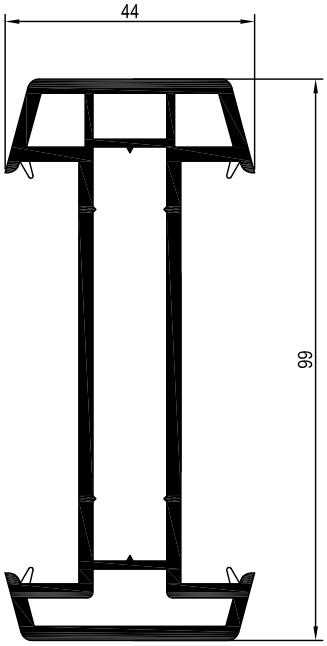

Face A

Expansion Coupler
White Profile Art. No. 560024
Laminated Profile Art. No. 597046

	350286
	2mm
Ix	15.0

253157 - 40 x 50

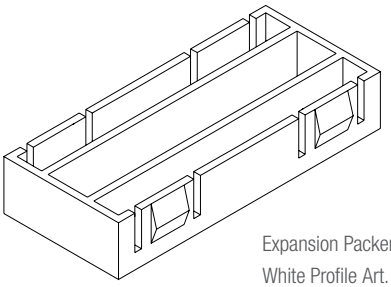

Expansion Packer
White Profile Art. No. 246691

REHAU TOTAL70 ANCILLARIES

BAYPOLES

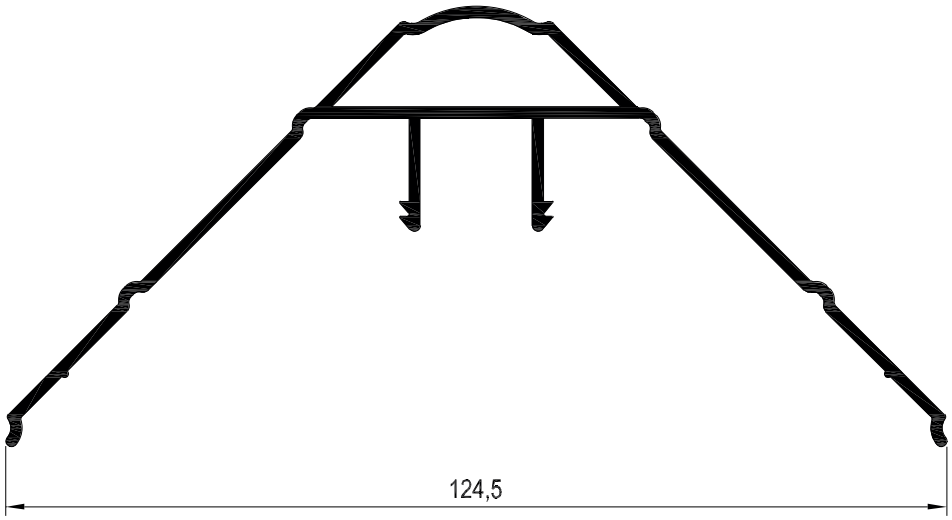

90° Corner Post PVC External Cap
White Profile Art. No. 206840
Laminated Profile Art. No. 216840

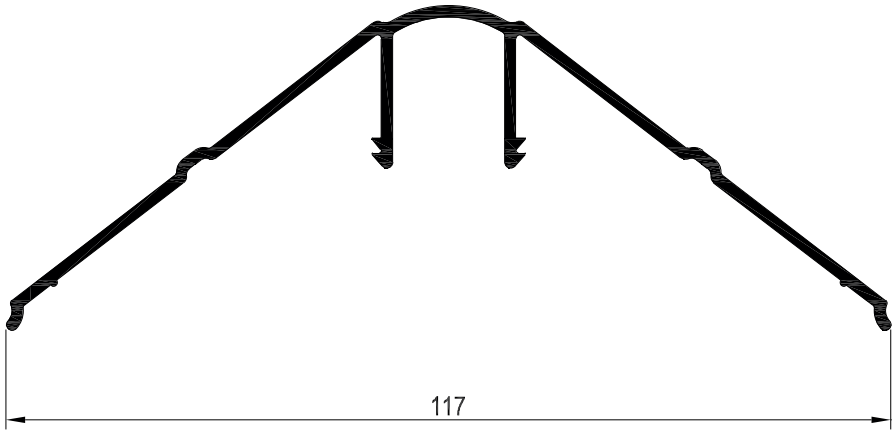

100°-120° PVC External Cap
White Profile Art. No. 206830
Laminated Profile Art. No. 216830

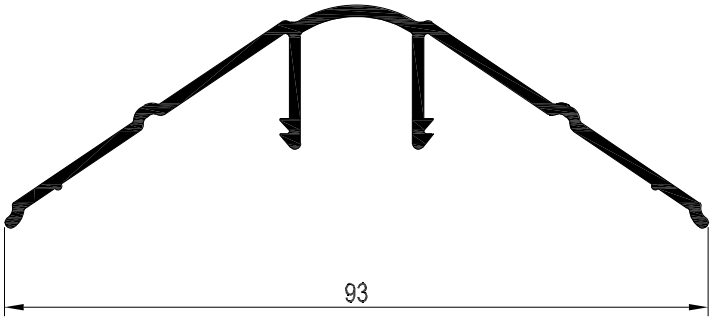

120°-150° and 135°-160° PVC External Cap
White Profile Art. No. 206810
Laminated Profile Art. No. 216810

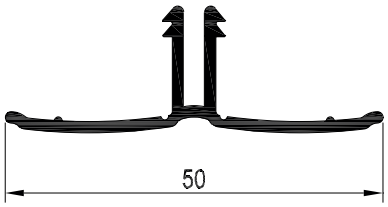

Large Internal Cap
White Profile Art. No. 206860
Laminated Profile Art. No. 216860

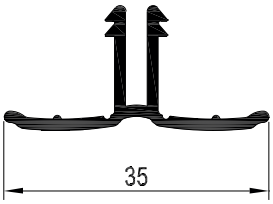

Standard Internal Cap
White Profile Art. No. 206870
Laminated Profile Art. No. 216870

Note - Please see Finished Product Drawings for assembly details

REHAU TOTAL70 ANCILLARIES

BAYPOLES

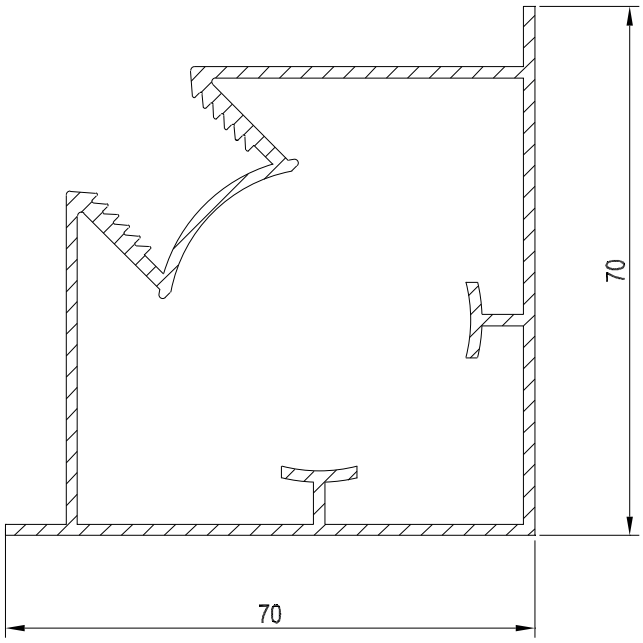

90° Corner Post Aluminium
Art. No. 206790

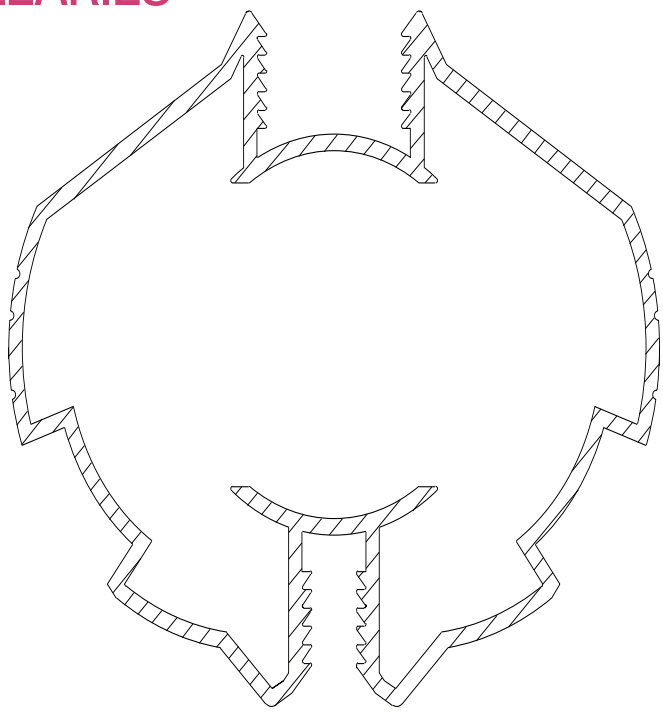

100°-120° Aluminium
Art. No. 206780

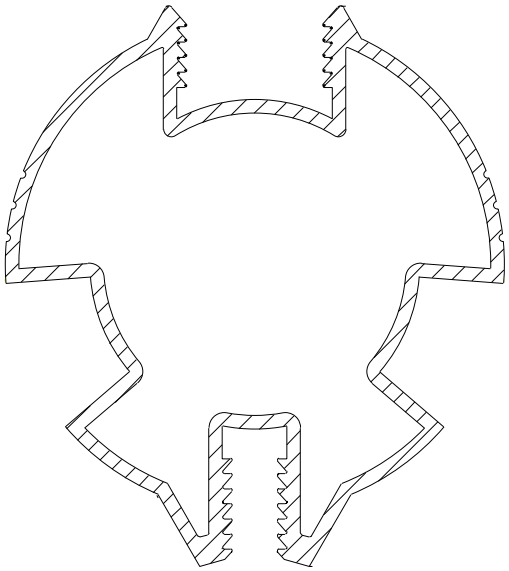

120°-150° Aluminium
Art. No. 206770

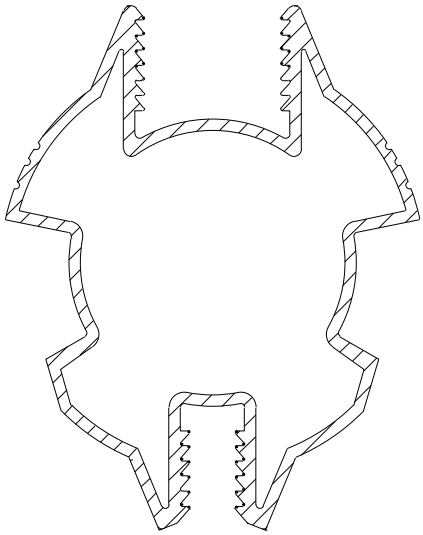

135°-160° Aluminium
Art. No. 206760

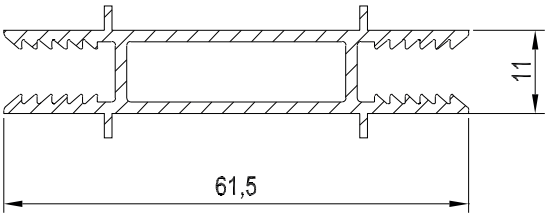

180° Aluminium
Art. No. 206800

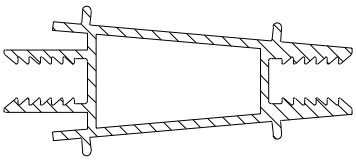

170° Coupler
Art. No. 206820

Note - Please see Finished Product Drawings for assembly details

REHAU TOTAL70 ANCILLARIES

BAYPOLES

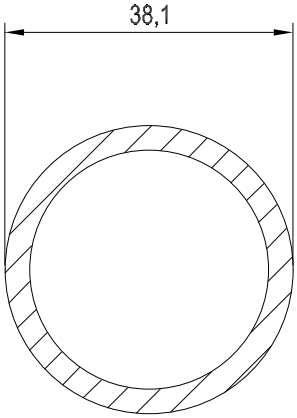

Variable Angle Aluminium
Art. No. 264319

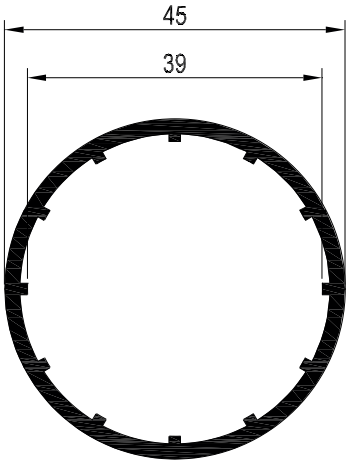

Variable Angle PVC
White Profile Art. No. 264409
Laminated Profile Art. No. 264399

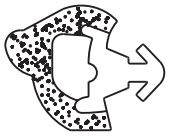

Co-extruded Seal
Art. No. 865260

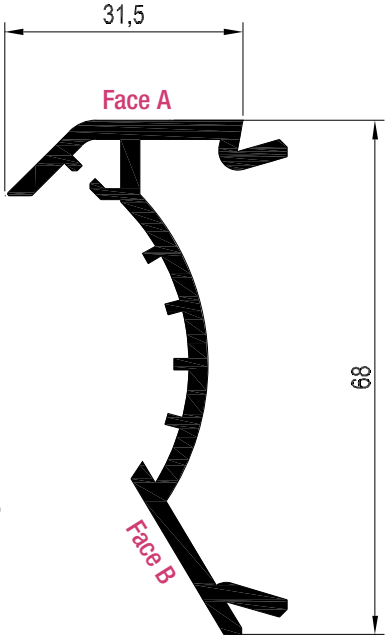

Variable Angle Adaptor PVC
White Profile Art. No. 264419
Laminated Profile Art. No. 264429

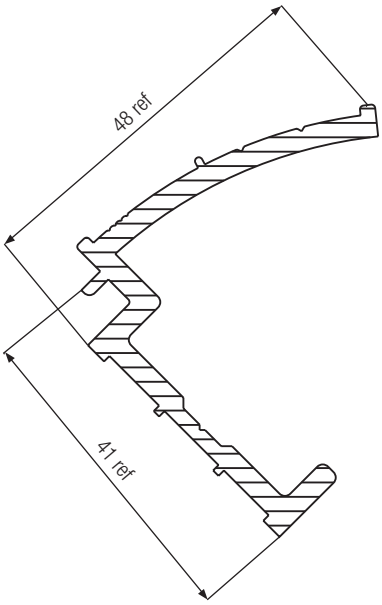

120°-135° Aluminium
Art. No. 240093

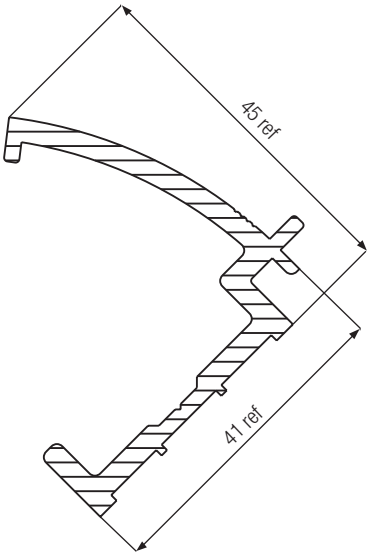

120°-135° Aluminium
Art. No. 240103

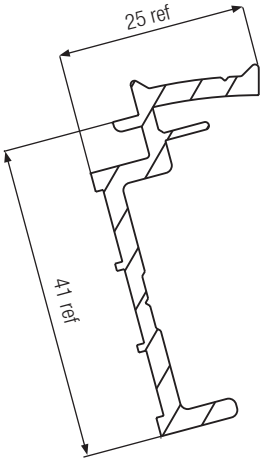

150° Aluminium
Art. No. 240113

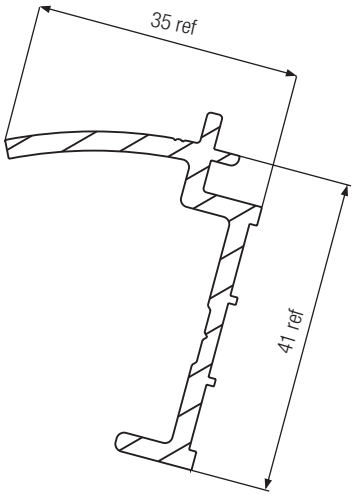

150° Aluminium
Art. No. 240123

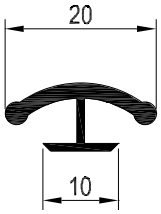

Inside Bay Cover Profile
White Art. No. 240143
Laminated Art. No. 240133

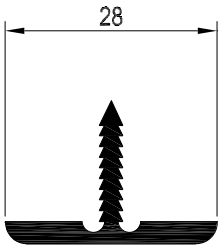

Inside Cover Profile
White Art. No. 558170
Laminated Art. No. 576530

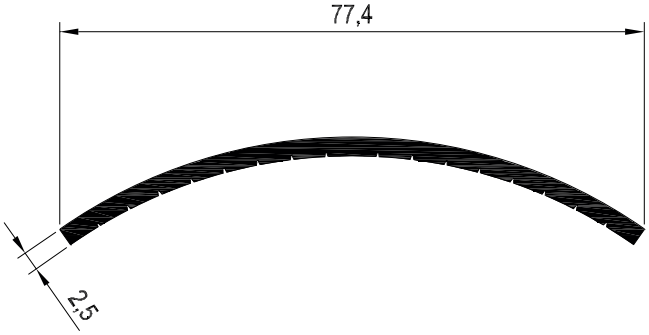

Outside Bay Cover Trim
White Art. No. 240153
Laminated Art. No. 240163

Note - Please see Finished Product Drawings for assembly details

REHAU TOTAL70 ANCILLARIES

BAYPOLES

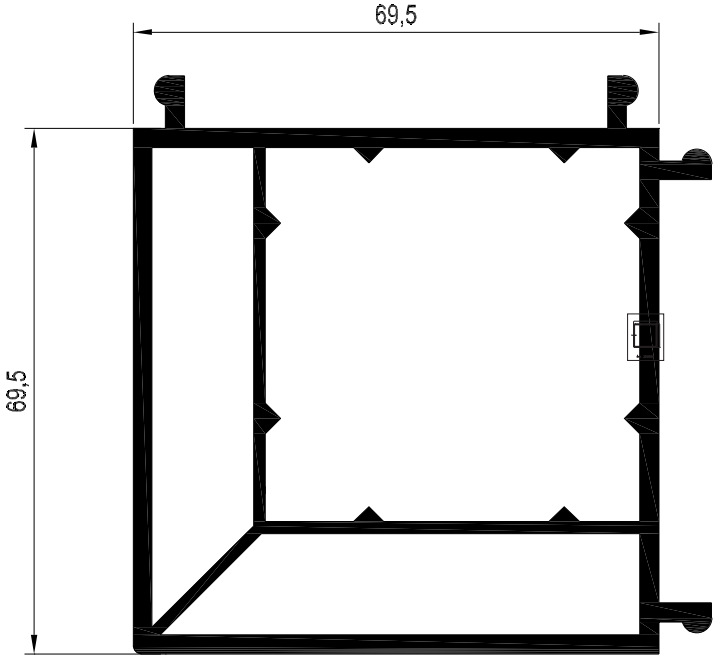

90° Corner Post
White Profile Art. No. 632653
Laminated Profile Art. No. 595870

	259894	200376
⊣⊢	2mm	1.5mm
Ix	10.46	8.15
Iy	10.46	8.15

259894 - 45 x 45 (welded)

200376 - 45 x 45 (welded)

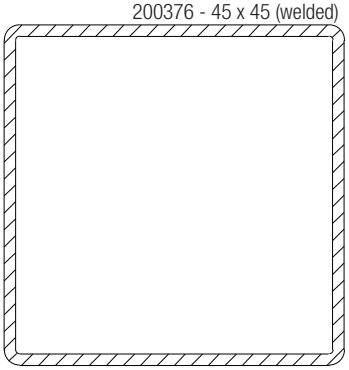

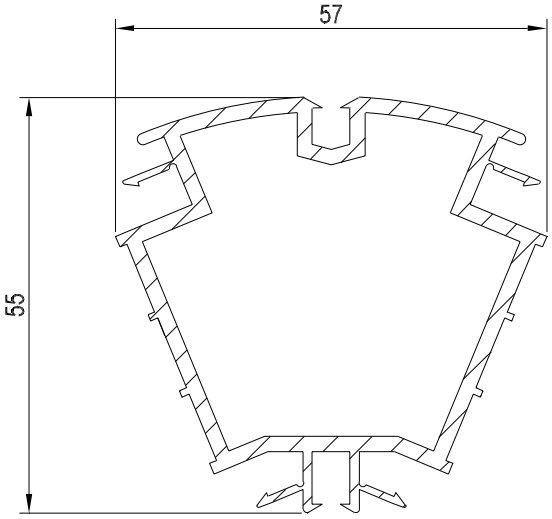

135° Fixed Angle Aluminium
Art. No. 246511

Note - Please see Finished Product Drawings for assembly details

REHAU TOTAL70 ANCILLARIES

WEATHER / DRAINAGE

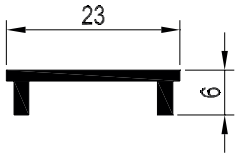

Bridge Packer
Art. No. 614052

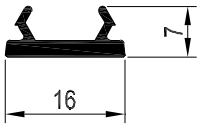

Eurogroove Infill
White Art. No. 558440
Coloured Art. No. 588010

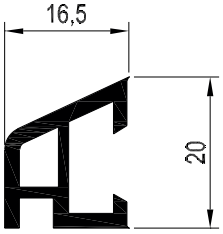

Weather Rail
White Art. No. 561510
Laminated Art. No. 596290

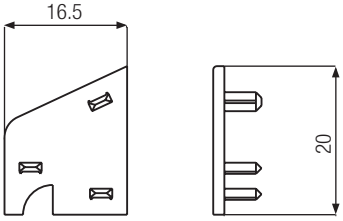

End Caps for Weather Rail
Art. No. 269460 (Right)
Art. No. 269470 (Left)

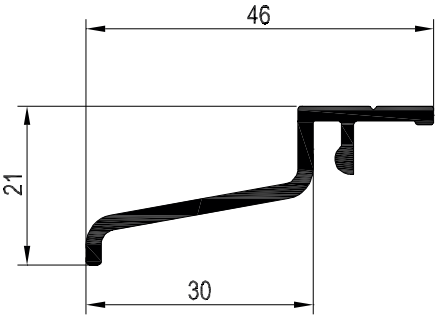

Head Drip
White Art. No. 546560
Laminated Art. No. 576231

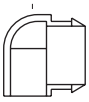

Drainage Cover Cap
Art. No. 645594

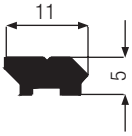

Weather Rail Connector Aluminium
Art. No. 258523

GEORGIAN BARS

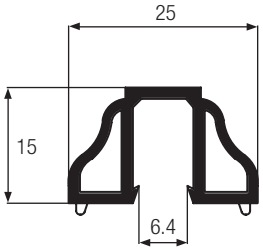

Scultured Georgian Bar
Art. No. 200029

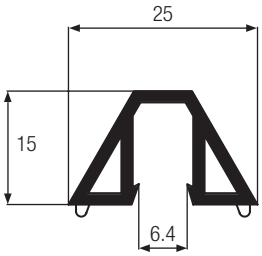

Chamfered Georgian Bar
Art. No. 200031

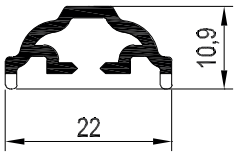

Sculptured Georgian Bar
White Art. No. 559261
Laminated Art. No. 589261

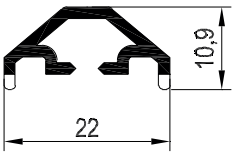

Chamfered Georgian Bar
White Art. No. 559251
Laminated Art. No. 589251

Art. No.	Description
200032	24mm Bar Clip
200033	28mm Bar Clip
200034	Cruciform Clip

Georgian Bar Clip Details
For use with Art. No. 200029 and 200031

Art. No.	Description
200284	24mm Bar Clip
200344	28mm Bar Clip
200283	Cruciform Clip

Georgian Bar Clip Details
For use with Art. No. 589251 and 589261

REHAU TOTAL70 ANCILLARIES

LOW THRESHOLD DETAILS FOR DOORS

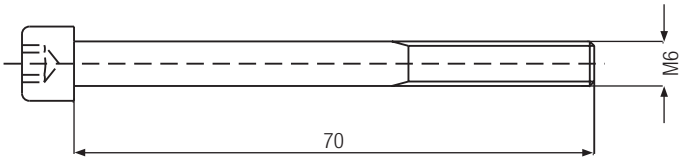

Screw M6 x 70 Galvanised Steel
Art. No. 257348

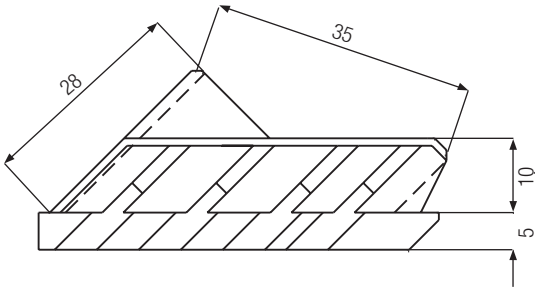

Weldable Corner Joint for Door Sash T and Z
Art. No. 259036

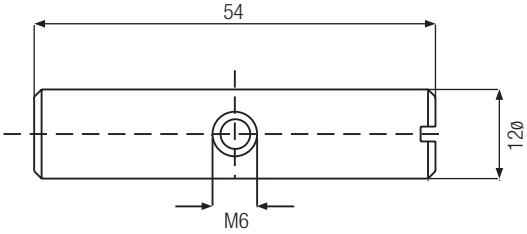

Bolt 54 x 12mm Galvanised Steel
Art. No. 251537

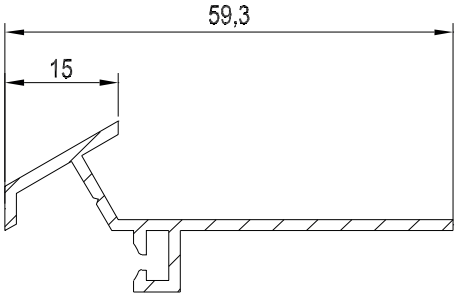

Threshold Strike Ledge
Art. No. 254946
To use with Art. No. 200476

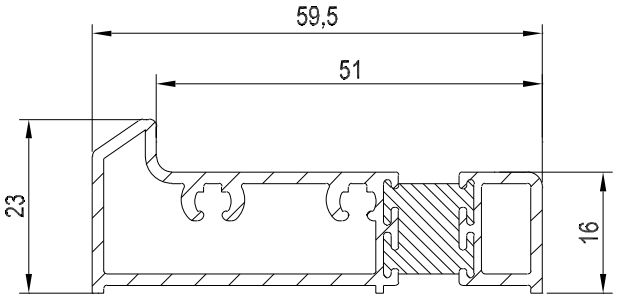

Low Threshold
Art. No. 200476

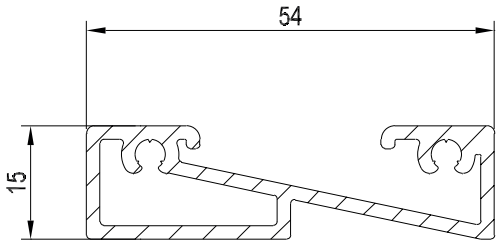

15mm Low Threshold
Art. No. 233214

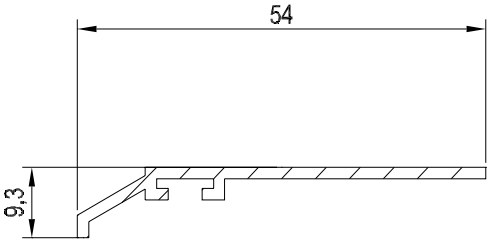

Low Threshold Sash Adaptor
Art. No. 238364
To use with Art. No. 233214

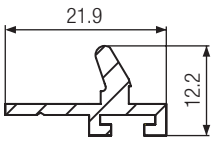

Low Threshold Sash Adaptor for
Outward Opening Doors
Art. No. 200309

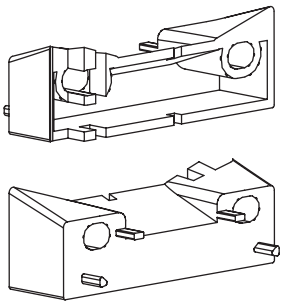

Low Threshold End Caps
Art. No. 200276
To use with Art. No. 233214

Low Threshold Seal
Art. No. 837310
To use with Art. No. 238364

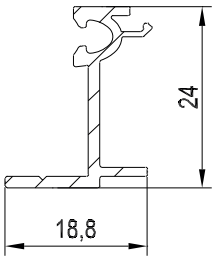

Door Rebate Profile Aluminium
Art. No. 260008

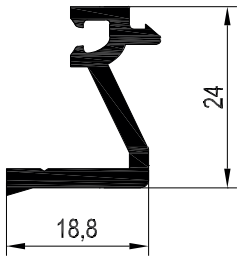

Door Rebate Profile PVC
Art. No. 546000

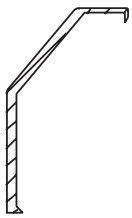

Frame Cover (Kick plate)
Art. No. 200044

Article Number	Variant Number	Description	Finish	Quantity (metres or pieces)	Packaging	Colour: White	Colour: Other
200029	701 / 705 / 715	Sculptured Georgian Bar	White	36	Pack	*	
200029	751 / 370	Sculptured Georgian Bar	Mahogany	36	Pack		*
200029	251 / 270	Sculptured Georgian Bar	Rosewood	36	Pack		*
200029	351 / 790	Sculptured Georgian Bar	Golden Oak	36	Pack		*
200031	701 / 705 / 715	Chamfered Georgian Bar	White	36	Pack	*	
200031	751 / 370	Chamfered Georgian Bar	Mahogany	36	Pack		*
200031	251 / 270	Chamfered Georgian Bar	Rosewood	36	Pack		*
200031	351 / 790	Chamfered Georgian Bar	Golden Oak	36	Pack		*
200032	001	24mm Bar Clip for 200029 and 200031	White	250	Pieces in a Bag	*	
200032	002	24mm Bar Clip for 200029 and 200032	Brown	250	Pieces in a Bag		*
200032	003	24mm Bar Clip for 200029 and 200033	Acorn	250	Pieces in a Bag		*
200033	001	28mm Bar Clip for 200029 and 200031	White	250	Pieces in a Bag	*	
200033	002	28mm Bar Clip for 200029 and 200032	Brown	250	Pieces in a Bag		*
200033	003	28mm Bar Clip for 200029 and 200033	Acorn	250	Pieces in a Bag		*
200034	001	Cruciform Clip for 200029 and 200031	White	100	Pieces in a Bag	*	
200034	002	Cruciform Clip for 200029 and 200031	Brown	100	Pieces in a Bag		*
200034	003	Cruciform Clip for 200029 and 200031	Acorn	100	Pieces in a Bag		*
200044	001	Frame Cover (Kick plate)	Silver	6	Length		*
200044	002	Frame Cover (Kick plate)	Gold	6	Length		*
200111	001	Dummy Mullion End Cap For Low Threshold For REHAU TOTAL70C Transom / Mullion (546085)	White	10	Pieces in a Bag	*	
200111	002	Dummy Mullion End Cap For Low Threshold For REHAU TOTAL70C Transom / Mullion (546085)	Brown	10	Pieces in a Bag		*
200111	003	Dummy Mullion End Cap For Low Threshold For REHAU TOTAL70C Transom / Mullion (546085)	Acorn	10	Pieces in a Bag		*
200131	001	French Window Spacer	Aluminium	6	Length		*
200276	001	Low Threshold End Caps	White	25	Pieces in a Pieces in a Bag	*	
200276	002	Low Threshold End Caps	Gold	25	Pieces in a Bag		*
200276	003	Low Threshold End Caps	Black	25	Pieces in a Bag		*
200283	001	Cruciform Clip for 589251 and 589261	White	250	Pieces in a Bag	*	
200283	002	Cruciform Clip for 589251 and 589261	Brown	250	Pieces in a Bag		*
200283	003	Cruciform Clip for 589251 and 589261	Acorn	250	Pieces in a Bag		*
200284	001	24mm Bar Clip for 589251 and 589261	White	250	Pieces in a Bag	*	
200284	002	24mm Bar Clip for 589251 and 589261	Brown	250	Pieces in a Bag		*
200284	003	24mm Bar Clip for 589251 and 589261	Acorn	250	Pieces in a Bag	*	
200309	001	Low Threshold Sash Adaptor for Outward Opening Doors	Silver	5	Length		*
200309	002	Low Threshold Sash Adaptor for Outward Opening Doors	Gold	5	Length		*

Article Number	Variant Number	Description	Finish	Quantity (metres or pieces)	Packaging	Colour: White	Colour: Other
200344	001	28mm Bar Clip for 589251 and 589261	White	250	Pieces in a Bag	*	
200344	002	28mm Bar Clip for 589251 and 589261	Brown	250	Pieces in a Bag		*
200344	003	28mm Bar Clip for 589251 and 589261	Acorn	250	Pieces in a Bag		*
200367	001	French Door Spacer	Aluminium	6	Length		*
200376	001	Reinforcement 45 x 45 x 1.5mm (welded)	Steel	6	Length		*
200476	001	Low Threshold	Aluminium	6	Length		*
200504	701	24.2mm Coupling Profile	White	72	Pack	*	
200506	721	24.2mm Coupling Profile	Mahogany	36	Pack		*
200506	221	24.2mm Coupling Profile	Rosewood	36	Pack		*
200506	321	24.2mm Coupling Profile	Golden Oak	36	Pack		*
200574	001	Dummy Mullion End Cap For REHAU TOTAL70C Transom / Mullion (546085)	White	50	Pieces in a Bag	*	
200574	002	Dummy Mullion End Cap For REHAU TOTAL70C Transom / Mullion (546085)	Brown	50	Pieces in a Bag		*
200574	003	Dummy Mullion End Cap For REHAU TOTAL70C Transom / Mullion (546085)	Acorn	50	Pieces in a Bag		*
206760	001	135°-160° Aluminium	Aluminium	6	Length		*
206770	001	120°-150° Aluminium	Aluminium	6	Length		*
206780	001	100°-120° Aluminium	Aluminium	6	Length		*
206790	001	90° Corner Post Aluminium	Aluminium	6	Length		*
206800	001	180° Aluminium	Aluminium	6	Length		*
206810	701	120°-150° and 135°-160° PVC External Cap	White	24	Pack	*	
206820	701	170° Coupler	Aluminium	6	Pack		*
206830	701	100°-120° PVC External Cap	White	24	Pack	*	
206840	701	90° Corner Post PVC External Cap	White	24	Pack	*	
206860	701	120°-150° PVC Internal Cap	White	24	Pack	*	
206870	701	120°-150° and 135°-160° PVC Internal Cap and In-line 180° Coupler Cap	White	24	Pack	*	
216810	751	120°-150° and 135°-160° PVC External Cap	Mahogany	12	Pack		*
216810	251	120°-150° and 135°-160° PVC External Cap	Rosewood	12	Pack		*
216810	351	120°-150° and 135°-160° PVC External Cap	Golden Oak	12	Pack		*
216830	751	100°-120° PVC External Cap	Mahogany	12	Pack		*
216830	251	100°-120° PVC External Cap	Rosewood	12	Pack		*
216830	351	100°-120° PVC External Cap	Golden Oak	12	Pack		*
216840	751	90° Corner Post PVC External Cap	Mahogany	12	Pack		*
216840	251	90° Corner Post PVC External Cap	Rosewood	12	Pack		*
216840	351	90° Corner Post PVC External Cap	Golden Oak	12	Pack		*
216860	751	120°-150° PVC Internal Cap	Mahogany	12	Pack		*
216860	251	120°-150° PVC Internal Cap	Rosewood	12	Pack		*
216860	351	120°-150° PVC Internal Cap	Golden Oak	12	Pack		*

Article Number	Variant Number	Description	Finish	Quantity (metres or pieces)	Packaging	Colour: White	Colour: Other
216870	751	120°-150° and 135°-160° PVC Internal Cap and In-line 180° Coupler Cap	Mahogany	12	Pack		*
216870	251	120°-150° and 135°-160° PVC Internal Cap and In-line 180° Coupler Cap	Rosewood	12	Pack		*
216870	351	120°-150° and 135°-160° PVC Internal Cap and In-line 180° Coupler Cap	Golden Oak	12	Pack		*
233214	001	15mm Low Threshold	Silver	20	Pack		*
233214	002	15mm Low Threshold	Gold	20	Pack		*
237551	001	135° Coupler for 150mm Sill	White	25	Pairs in a Pack	*	
237551	002	135° Coupler for 150mm Sill	Brown	25	Pairs in a Pack		*
237551	003	135° Coupler for 150mm Sill	Acorn	25	Pairs in a Pack		*
237561	001	180° In-line Coupler for 150mm Sill	White	25	Pairs in a Pack	*	
237561	002	180° In-line Coupler for 150mm Sill	Brown	25	Pairs in a Pack		*
237561	003	180° In-line Coupler for 150mm Sill	Acorn	25	Pairs in a Pack		*
237571	001	90° Coupler for 150mm Sill	White	25	Pairs in a Pack	*	
237571	002	90° Coupler for 150mm Sill	Brown	25	Pairs in a Pack		*
237571	003	90° Coupler for 150mm Sill	Acorn	25	Pairs in a Pack		*
238364	001	Low Threshold Sash Adaptor	Silver	36	Pack		*
238364	002	Low Threshold Sash Adaptor	Gold	6	Length		*
240093	001	120°-135° Aluminium	Aluminium	6	Length		*
240103	001	120°-135° Aluminium	Aluminium	6	Length		*
240113	001	150° Aluminium	Aluminium	6	Length		*
240123	001	150° Aluminium	Aluminium	6	Length		*
240133	251	Inside Bay Cover Profile	Rosewood	30	Pack		*
240133	790	Inside Bay Cover Profile	Golden Oak	12	Pack		*
240133	001 (751)	Inside Bay Cover Profile	Mahogany	30	Pack		*
240143	001	Inside Bay Cover Profile	White	30	Pack	*	
240153	001	Outside Bay Cover Trim	White	30	Pack	*	
240163	001	Outside Bay Cover Trim	Mahogany	30	Pack		*
240163	251	Outside Bay Cover Trim	Rosewood	30	Pack		*
240163	790	Outside Bay Cover Trim	Golden Oak	30	Pack		*
245295	001	Casement Horns	White	25	Pieces in a Bag	*	
246235	001	Mechanical Joint For Door Sash (546635 & 546625)	White	20	Pieces in a Bag	*	
246320	701	95mm Stub Sill	White	36	Pack	*	
246330	701	150mm Stub Sill	White	24	Pack	*	
246340	001	180mm Stub Sill	White	24	Pack	*	
246350	751 / 721	95mm Stub Sill	Mahogany	12	Pack		*
246350	251 / 221	95mm Stub Sill	Rosewood	12	Pack		*
246350	351 / 321	95mm Stub Sill	Golden Oak	12	Pack		*

Article Number	Variant Number	Description	Finish	Quantity (metres or pieces)	Packaging	Colour	
						White	Other
246360	751 / 721	150mm Stub Sill	Mahogany	12	Pack		*
246360	251 / 221	150mm Stub Sill	Rosewood	12	Pack		*
246360	351 / 321	150mm Stub Sill	Golden Oak	12	Pack		*
246390	001	End Caps for 95mm Stub Sill	White	25	Pairs in a Pack	*	
246390	002	End Caps for 95mm Stub Sill	Brown	25	Pairs in a Pack		*
246390	003	End Caps for 95mm Stub Sill	Acorn	25	Pairs in a Pack		*
246400	001	End Caps for 150mm Stub Sill	White	25	Pairs in a Pack	*	
246400	002	End Caps for 150mm Stub Sill	Brown	25	Pairs in a Pack		*
246400	003	End Caps for 150mm Stub Sill	Acorn	25	Pairs in a Pack		*
246410	001	End Caps for 180mm Stub Sill	White	25	Pairs in a Pack	*	
246410	002	End Caps for 180mm Stub Sill	Brown	25	Pairs in a Pack		*
246410	003	End Caps for 180mm Stub Sill	Acorn	25	Pairs in a Pack		*
246488	001	3mm REHAU TOTAL70C to Patio Door Coupler	White	12	Pack	*	
246488	002	3mm REHAU TOTAL70C to Patio Door Coupler	Mahogany	12	Pack		*
246511	001	135° Fixed Angle Aluminium	Aluminium	6	Length		*
246691	001	Expansion Packer	White	100	Pieces in a Bag	*	
251355	002	Reinforcement 50 x 15 x 1.5mm	Steel	6	Length		*
251537	003	Bolt 54 x 12mm Galvanised Steel	Steel	100	Box		*
253157	002	Reinforcement 40 x 50 x 4mm	Steel	6	Length		*
254946	002	Threshold Strike Ledge	Aluminium	6	Length		*
255924	001	Reinforcement 30 x 20 x 2mm	Steel	6	Length		*
257348	002	Screw M6 x 70 Galvanised Steel	Steel	200	Pack		*
258358	003	Reinforcement 40 x 30 x 1.5mm	Steel	6	Length		*
258523	005	Weather Rail Connector Aluminium	Aluminium	6	Length		*
259036	001	Weldable Corner Joint for Door Sash T and Z	White	100	Pieces in a Bag	*	
259894	001	Reinforcement 45 x 45 x 2mm (welded)	Steel	6	Length		*
260008	001	Door Rebate Profile Aluminium	White	60	Pack	*	
260008	002	Door Rebate Profile Aluminium	Brown	60	Pack		*
261199	001	Mechanical Joint For Transom / Mullion (546465 & 546475)	White	100	Pieces in a Box	*	
261209	001	Mechanical Joint For Transom / Mullion (546085 & 546095)	White	100	Pieces in a Box	*	
264319	001	Variable Angle Aluminium	Aluminium	6	Length		*
264399	751 / 721	Variable Angle PVC	Mahogany	12	Pack		*
264399	251 / 221	Variable Angle PVC	Rosewood	12	Pack		*
264399	351 / 321	Variable Angle PVC	Golden Oak	12	Pack		*
264409	701	Variable Angle PVC	White	24	Pack	*	
264419	701	Variable Angle Adaptor PVC	White	48	Pack	*	

Article Number	Variant Number	Description	Finish	Quantity (metres or pieces)	Packaging	Colour	
						White	Other
264429	751 / 721	Variable Angle Adaptor PVC	Mahogany	24	Pack		*
264429	251 / 221	Variable Angle Adaptor PVC	Rosewood	24	Pack		*
264429	351 / 321	Variable Angle Adaptor PVC	Golden Oak	24	Pack		*
269460	002	End Caps for Weather Rail (Right)	White	100	Pieces in a Bag	*	
269460	003	End Caps for Weather Rail (Right)	Brown	100	Pieces in a Bag		*
269460	010	End Caps for Weather Rail (Right)	Acorn	100	Pieces in a Bag		*
269470	002	End Caps for Weather Rail (Left)	White	100	Pieces in a Bag	*	
269470	003	End Caps for Weather Rail (Left)	Brown	100	Pieces in a Bag		*
269470	010	End Caps for Weather Rail (Left)	Acorn	100	Pieces in a Bag		*
286928	001	Dummy Mullion End Cap For REHAU TOTAL70S Transom / Mullion (546665)	White	50	Pieces in a Bag	*	
286928	002	Dummy Mullion End Cap For REHAU TOTAL70S Transom / Mullion (546665)	Brown	50	Pieces in a Bag		*
286928	003	Dummy Mullion End Cap For REHAU TOTAL70S Transom / Mullion (546665)	Acorn	50	Pieces in a Bag		*
286934	001	Dummy Mullion End Cap For Low Threshold For REHAU TOTAL70S Transom / Mullion (546665)	White	10	Pieces in a Bag	*	
286934	002	Dummy Mullion End Cap For Low Threshold For REHAU TOTAL70S Transom / Mullion (546665)	Brown	10	Pieces in a Bag		*
286934	003	Dummy Mullion End Cap For Low Threshold For REHAU TOTAL70S Transom / Mullion (546665)	Acorn	10	Pieces in a Bag		*
317481	001	Run Through Sash Horns for REHAU TOTAL70C	White	25	Pieces in a Bag	*	
317481	002	Run Through Sash Horns for REHAU TOTAL70C	Brown	25	Pieces in a Bag		*
317481	003	Run Through Sash Horns for REHAU TOTAL70C	Acorn	25	Pieces in a Bag		*
317482	001	Run Through Sash Horns for REHAU TOTAL70S	White	25	Pieces in a Bag	*	
317482	002	Run Through Sash Horns for REHAU TOTAL70S	Brown	25	Pieces in a Bag		*
317482	003	Run Through Sash Horns for REHAU TOTAL70S	Acorn	25	Pieces in a Bag		*
350286	001	Reinforcement 70x11x2mm	Steel	6	Length		*
546000	701	Door Rebate Profile PVC	White	50	Pack	*	
546000	002	Door Rebate Profile PVC	Brown	50	Pack		*
546000	003	Door Rebate Profile PVC	Acorn	50	Pack		*
546200	701	15mm Frame Joining Profile	White	48	Pack	*	
546280	701	45mm Frame Extension	White	36	Pack	*	
546290	701	65mm Joining Profile / Conservatory Lintel Beam	White	24	Pack	*	
546300	701	3mm Frame Joining Profile	White	72	Pack	*	
546360	701	95mm Stub Sill	White	36	Pack	*	
546560	701	Head Drip	White	72	Pack	*	
558170	701	Inside Cover Profile	White	144	Pack	*	
558440	003	Eurogroove Infill	White	216	Pack	*	
559251	701 / 705 / 715	Chamfered Georgian Bar	White	72	Pack	*	

Article Number	Variant Number	Description	Finish	Quantity (metres or pieces)	Packaging	Colour: White	Colour: Other
559261	701 / 705 / 715	Sculptured Georgian Bar	White	72	Pack	*	
560024	701	Expansion Coupler	White	24	Pack	*	
560700	701	24mm Joining Profile	White	144	Pack	*	
561510	701	Weather Rail	White	144	Pack	*	
576221	751 / 721	3mm Frame Joining Profile	Mahogany	36	Pack		*
576221	251 / 221	3mm Frame Joining Profile	Rosewood	36	Pack		*
576221	351 / 321	3mm Frame Joining Profile	Golden Oak	36	Pack		*
576231	751	Head Drip	Mahogany	72	Pack		*
576231	251	Head Drip	Rosewood	72	Pack		*
576231	351	Head Drip	Golden Oak	72	Pack		*
576370	751 / 721	15mm Frame Joining Profile	Mahogany	48	Pack		*
576370	251 / 221	15mm Frame Joining Profile	Rosewood	48	Pack		*
576370	351 / 321	15mm Frame Joining Profile	Golden Oak	48	Pack		*
576530	003	Inside Cover Profile	Mahogany	144	Pack		*
576530	251	Inside Cover Profile	Rosewood	144	Pack		*
576780	751	65mm Joining Profile / Conservatory Lintel Beam	Mahogany	24	Pack		*
576780	251	65mm Joining Profile / Conservatory Lintel Beam	Rosewood	24	Pack		*
576790	751 / 721	45mm Frame Extension	Mahogany	36 / 24	Pack		*
576790	251 / 221	45mm Frame Extension	Rosewood	36 / 24	Pack		*
576790	351 / 321	45mm Frame Extension	Golden Oak	36 / 24	Pack		*
576870	751 / 721	95mm Stub Sill	Mahogany	36	Pack		*
576870	251 / 221	95mm Stub Sill	Rosewood	36	Pack		*
576870	351 / 321	95mm Stub Sill	Golden Oak	36	Pack		*
586340	751 / 721	180mm Stub Sill	Mahogany	12	Pack		*
586340	251 / 221	180mm Stub Sill	Rosewood	12	Pack		*
586340	351 / 321	180mm Stub Sill	Golden Oak	12	Pack		*
589251	751	Chamfered Georgian Bar	Mahogany	36	Pack		*
589251	251 / 270	Chamfered Georgian Bar	Rosewood	36	Pack		*
589251	351 / 790	Chamfered Georgian Bar	Golden Oak	36	Pack		*
589261	751	Sculptured Georgian Bar	Mahogany	36	Pack		*
589261	251 / 270	Sculptured Georgian Bar	Rosewood	36	Pack		*
589261	351 / 790	Sculptured Georgian Bar	Golden Oak	36	Pack		*
590010	751	16mm Joining Profile	Mahogany	36	Pack		*
590010	302	16mm Joining Profile	Rosewood	36	Pack		*
590010	790	16mm Joining Profile	Golden Oak	36	Pack		*
595870	751	90° Corner Post	Mahogany	24	Pack		*

Article Number	Variant Number	Description	Finish	Quantity (metres or pieces)	Packaging	Colour: White	Colour: Other
595870	251	90° Corner Post	Rosewood	24	Pack		*
595870	790	90° Corner Post	Golden Oak	24	Pack		*
596290	002	Weather Rail	Mahogany	72	Pack		*
596290	302	Weather Rail	Rosewood	72	Pack		*
596290	023	Weather Rail	Golden Oak	72	Pack		*
597046	151/721	Expansion Coupler	Mahogany	24	Pack		*
597046	042/221	Expansion Coupler	Rosewood	24	Pack		*
597046	190/741	Expansion Coupler	Golden Oak	24	Pack		*
614052	008	Bridge Packer	White	6	Length	*	
632653	701	90° Corner Post	White	24	Pack	*	
645594	007	Drainage Cover Cap	White	1000	Pieces in a Bag	*	
645594	003	Drainage Cover Cap	Brown	100	Pieces in a Bag		*
645594	010	Drainage Cover Cap	Acorn	100	Pieces in a Bag		*
837310	001	Low Threshold Seal	White	25	Box	*	
865260	001	Co-extruded Seal	Grey	300	Box		*

TRADE
WINDOWS & DOORS

REHAU TOTAL70
Ancillaries Profile Print
suitable for the complete
suite of REHAU TOTAL70
window & door systems

TOTAL 70C
CHAMFERED SYSTEM

TOTAL 70S
SCULPTURED SYSTEM

TOTAL 70R
REVERSIBLE SYSTEM

UK & IRELAND SALES OFFICES

London, REHAU Ltd, The Building Centre, 25 Store Street, London WC1E 7BT Phone: 0207 580 6155 Fax: 0207 307 8595 **Slough**, Units 5 J & K, Langley Business Centre, Station Road, Langley, Slough SL3 8DS Phone: 01753 588500 Fax: 01753 588501 **Manchester,** Brinell Drive, Irlam, Manchester M44 5BL Phone: 0161 777 7400 Fax: 0161 777 7401 **Glasgow,** Phoenix House, Phoenix Crescent, Strathclyde Business Park, Bellshill, North Lanarkshire ML4 3NJ Phone: 01698 503700 Fax: 01698 503701 **Dublin**, 9 St. Johns Court, Business Park, Swords Road, Santry, Dublin 9 Phone: 00353 (0)1 8165020 Fax: 00353 (0)1 8165021

Our verbal and written application engineering advice is based upon experience and the best of our knowledge. However, it is to be regarded as non-binding information. Working conditions and use under conditions for which the product was not intended and over which we have no influence exclude any claim resulting from our information. We recommend that a check is made as to whether the REHAU product is suitable for the envisaged purpose. Application, use and processing of the products is carried out beyond the scope of our control and are therefore carried out exclusively at your own responsibility. If liability should still apply, then this is restricted, in the case of all damage, the value of the goods supplied by us and used by you.
Our warranty applies to the consistent quality of our products as per our specification and in accordance with our general terms and conditions of delivery and payment. This document is protected by copyright. All rights based on this are reserved. No part of this publication may be translated, reproduced or transmitted in any form or by any similar means, electronic or mechanical, photocopying, recording or otherwise, or stored in a data retrieval system.